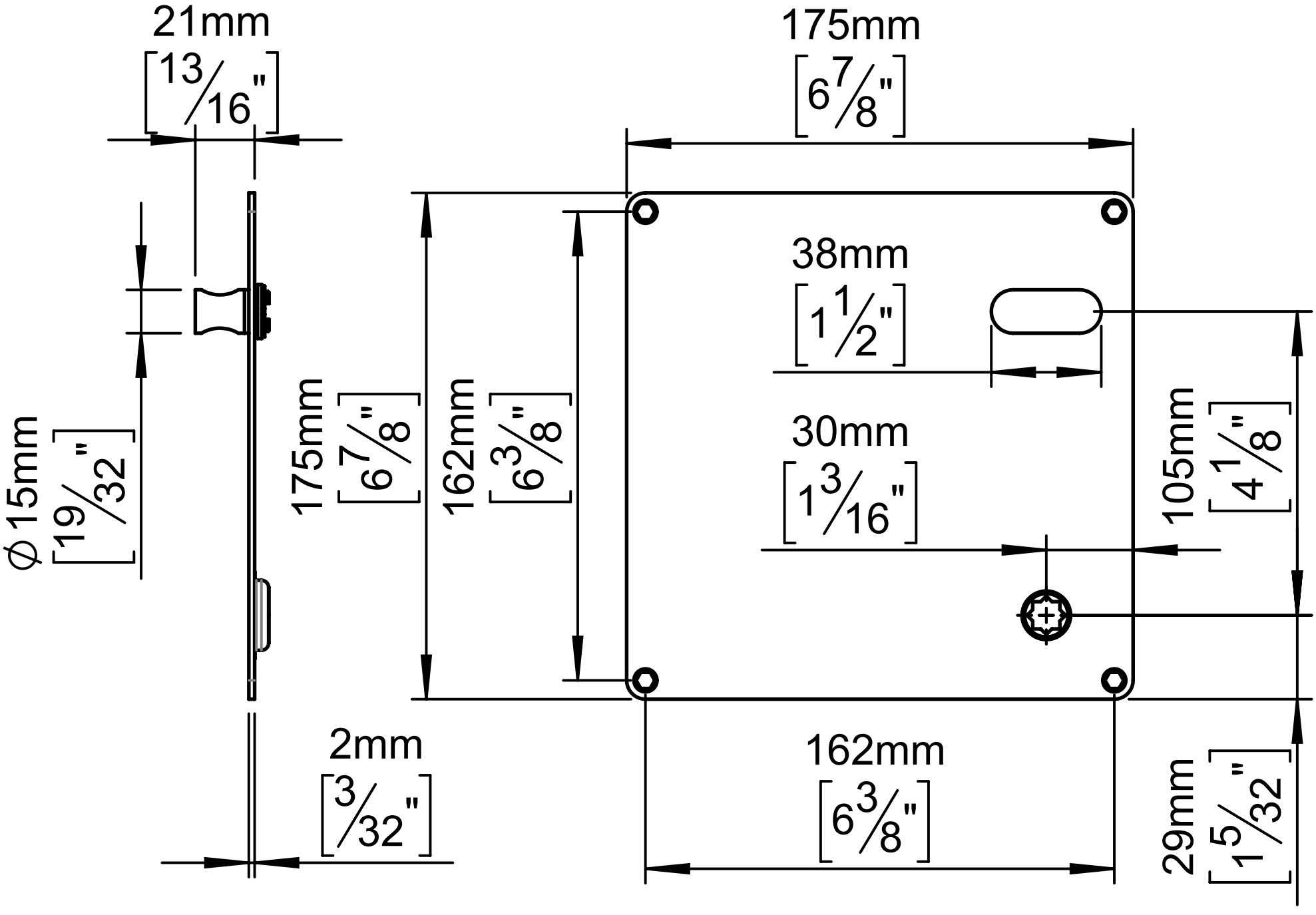
21mm
[13/16"]
175mm
[6 7/8"]
38mm
[1 1/2"]
30mm
[1 3/16"]
Ø15mm
[19/32"]
175mm
[6 7/8"]
162mm
[6 3/8"]
105mm
[4 1/8"]
2mm
[3/32"]
162mm
[6 3/8"]
29mm
[1 5/32"]